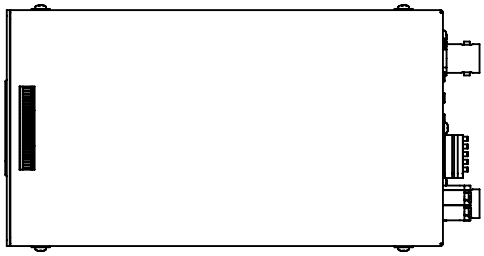

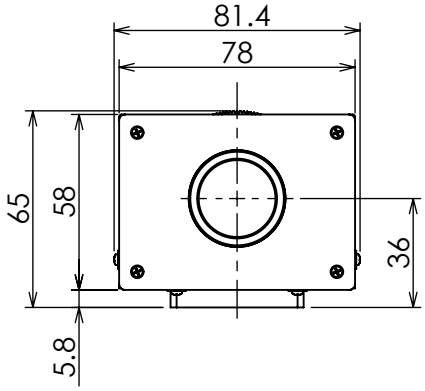
81.4
78
65
58
36
5.8

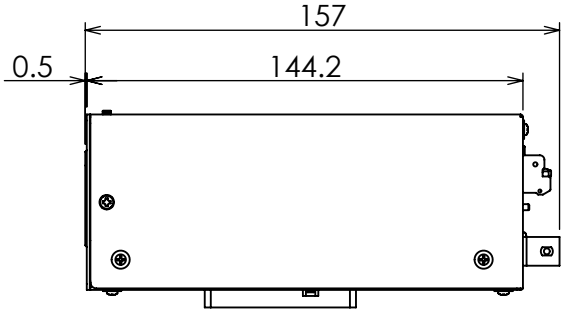
157
0.5
144.2

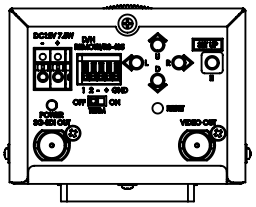
DC12V 7.2W
DIP
SELECTOR
1 2 - + GND
OFF ON
POWER
SDI OUT
VIDEO OUT

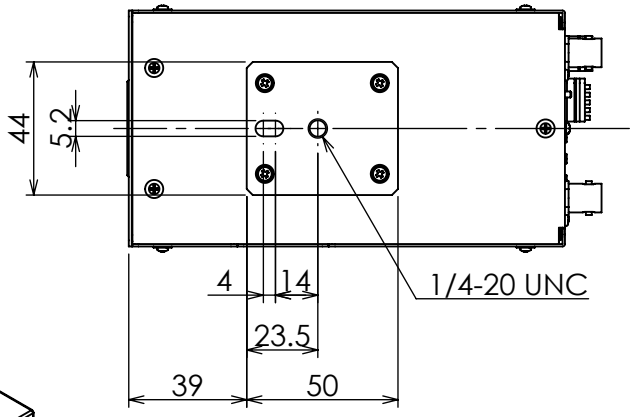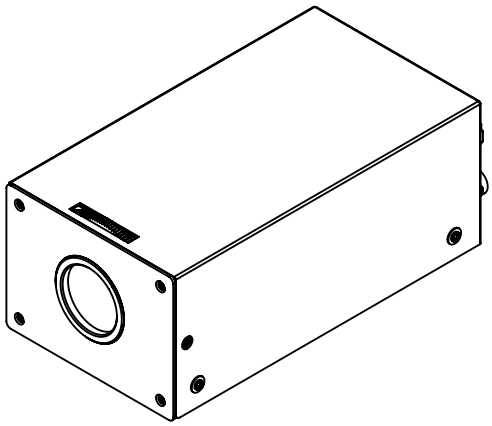
44
5.2
4
14
23.5
39
50
1/4-20 UNC