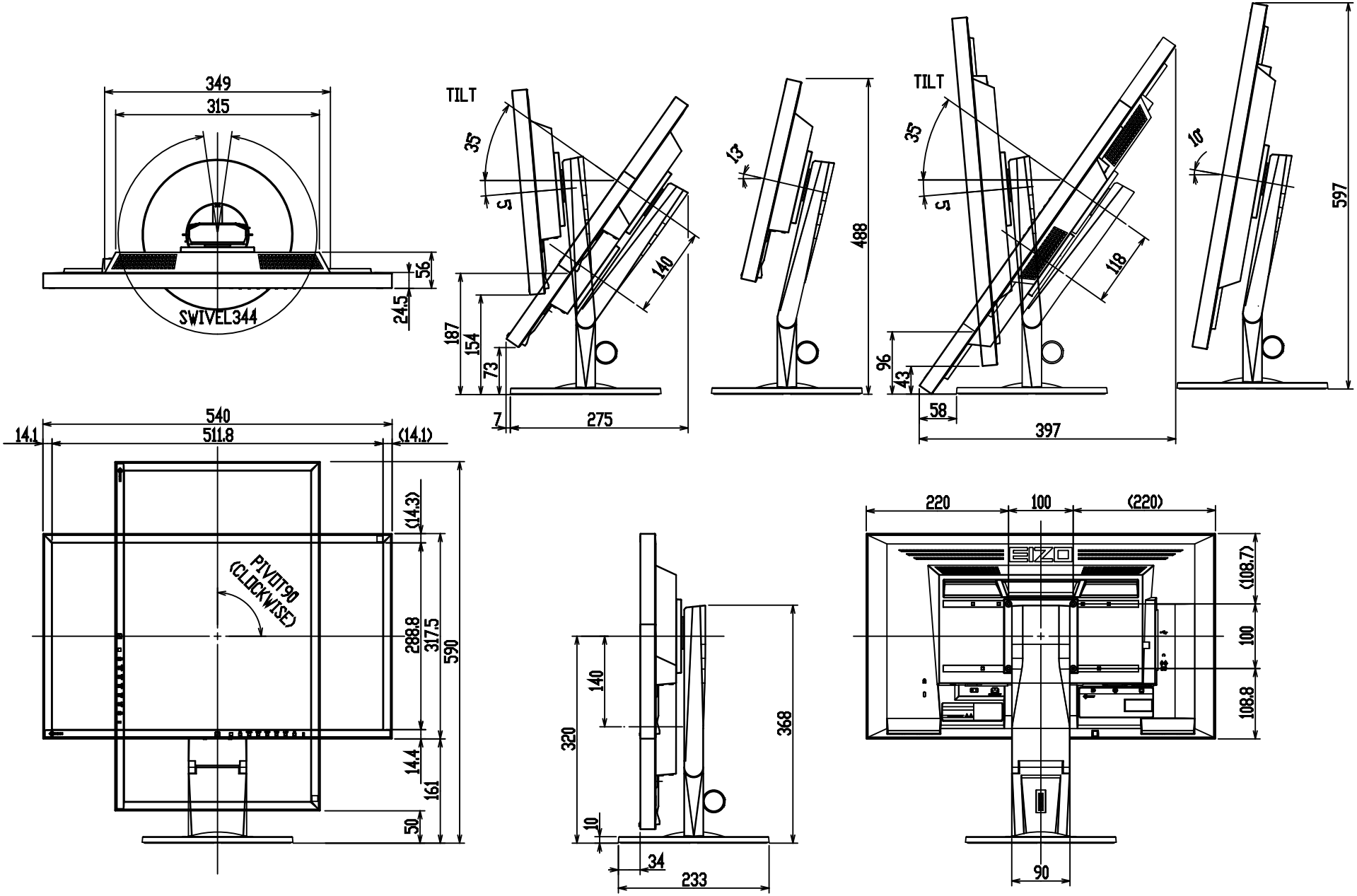EV2316W/EV2336W